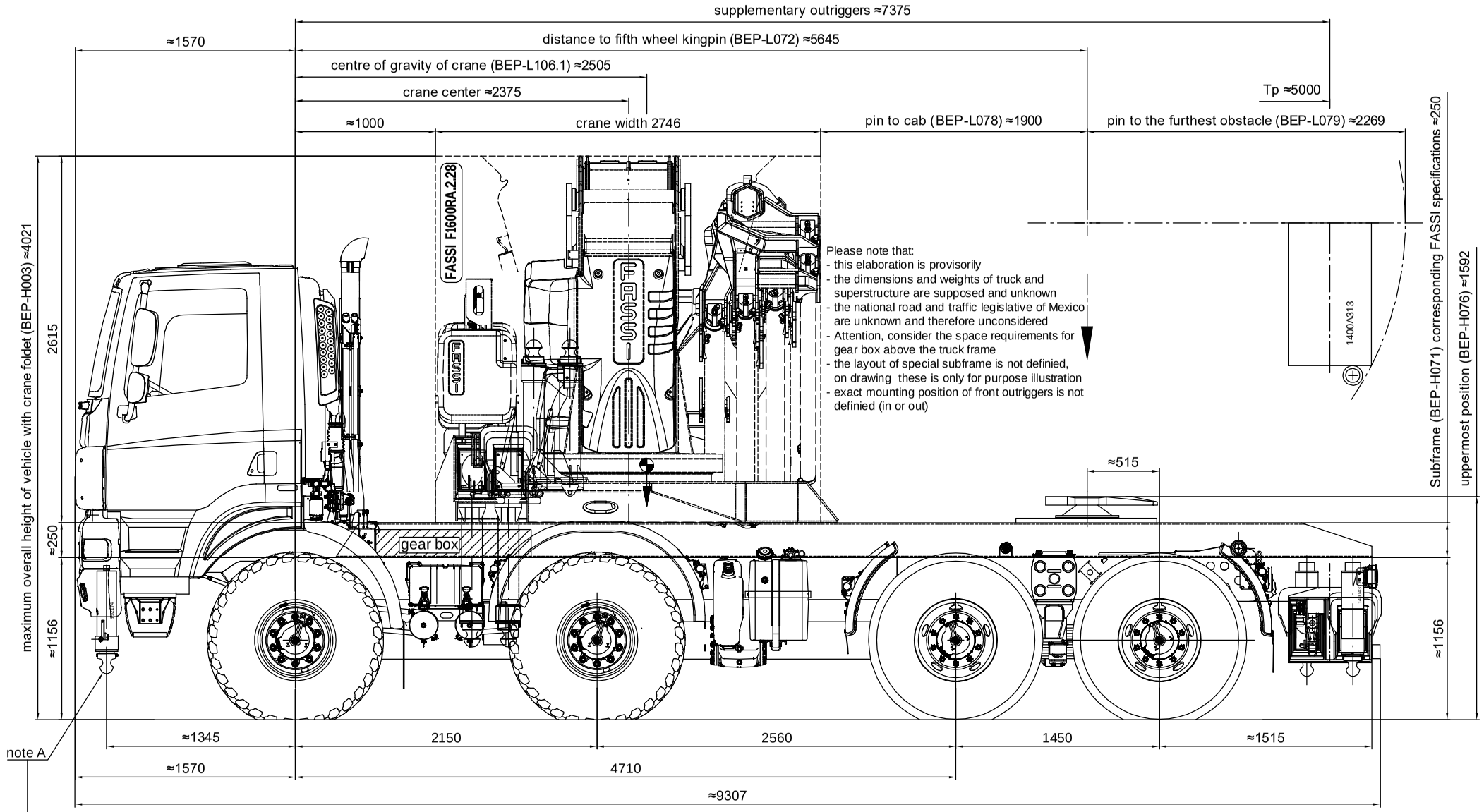

Eurogru S.A de C.V
- crane: Fassi F1600RA.2.28
- without supplementary functions
- hydraulic spread 9960mm
- crane stabilizers hydraulic 180° tiltable
- supplementary outriggers typ 1400A313, Tpmin 3900mm hydraulic spread 9170mm, stabilizers fixed
- Front stabilizer with two cylinders
  Exact mounting position is not definied (in or out)
  consider chassis front reinforcing (check with supplier)

Chassis supplier
- Vehicle: TATRA T158 PHOENIX 8x8
- Drawing-Nr.: 8P5R46 (dated: 07.2012)
- Cab typ: small
- Wheelbase 1.-2. axis: 2150mm
- Wheelbase 2.-3. axis: 2560mm
- Whellbase 3.-4. axis: 1450mm
- Gross weight 1. axis: 9000kg
- Gross weight 2. axis: 9000kg
- Gross weight 3. axis: 16000kg
- Gross weight 4. axis: 16000kg
- Gross total weight: 50000kg
- The exact weights and dimensions must be from the chassis supplier

Drawing is for illustrative purpose only

BEP-codes corresponding ISO21308

Pos.	Artikel-Nr.	Anz.	Artikel-Bezeichnung	Abmessungen	Norm	Werkstoff	Gewicht
Änderungen: (Kurzbeschreibung; Datum; Kürzel)					Allgemeintoleranzen nach:		
					EN DIN ISO 2768mK / 13920AF / 9013-1		
					Gezeichnet	13.10.2017	fs
					Freigabe		
Baugruppe:					Auftragsgeber		

Tatra T158 8x8 PHOENIX / Fassi F1600RA.2.28

Format A2 quer

Notterkran AG Oberentfelden Boswil Rickenbach Aclens

F1485-02

Index

\\andb001\Fassi Schweiz AG\03. Verkauf\03.01 Offerten\F1485\F1485-00.dwg

Note A: Exact mounting position is not definied (in or out)
Consider chassis front reinforcing (check with supplier)